LUMILEDS

ILLUMINATION
HORTICULTURE

LUXEON 5050

High efficacy and superior robustness in a multi-die, high power package, enabling cost-effective system design

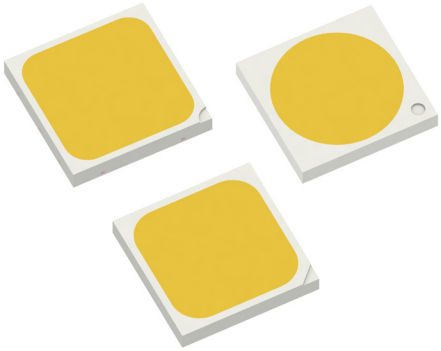

LUXEON 5050 is a multi-die, high power package that provides high luminance from a super robust package to enable cost effective and reliable fixture designs. LUXEON 5050 uses an industry standard 5050 surface mount package with a fairly small Light Emitting Surface (LES). LUXEON 5050 product family includes LUXEON 5050 Round LES, LUXEON 5050 Square LES and LUXEON 5050 HE, three product lines. LUXEON 5050 comes in 70CRI, 80CRI and 90CRI with a wide range of CCTs, and offers hot-color targeting to ensure that the LEDs are within color target at application conditions of 85°C.

FEATURES AND BENEFITS
Superior lm/W enables outstanding efficacy in end application
Extremely reliable package design affirms long lifetime in harsh environments [1]
Robust coating design for enhanced sulfur protection capability (LUXEON 5050 Square LES) [1]
Two voltage configurations are compatible with low cost high efficacy drivers
Low R_{th} enables effective thermal dissipation design for higher efficiency
Hot-color targeting ensures color is within ANSI bin at 85°C
3-step and 5-step MacAdam ellipse binning structure ensures excellent color uniformity

PRIMARY APPLICATIONS
Street Lights
High Bay
Low Bay
Flood Lights
Wall Pack
Landscape Lighting
Downlights

1. Refer to reliability datasheet for more details.

No. E507562

DS174 LUXEON 5050 Product Datasheet ©2022 Lumileds Holding B.V. All rights reserved.

Table of Contents

General Product Information **2**
Product Test Conditions 2
Part Number Nomenclature 2
Lumen Maintenance 2
Environmental Compliance 2
Performance Characteristics **3**
Product Selection Guide 3
Optical Characteristics 8
Electrical and Thermal Characteristics 8
Absolute Maximum Ratings **8**
Characteristic Curves **9**
Spectral Power Distribution Characteristics 9
Light Output Characteristics 10
Forward Current Characteristics 12
Radiation Pattern Characteristics 14
Product Bin and Labeling Definitions **15**
Decoding Product Bin Labeling 15
Luminous Flux Bins 16
Color Bin Definitions 18
Forward Voltage Bins 19
Mechanical Dimensions **20**
Reflow Soldering Guidelines **22**
JEDEC Moisture Sensitivity 22
Solder Pad Design 23
Packaging Information **23**
Pocket Tape Dimensions 23
Reel Dimensions 24

 ©2022 Lumileds Holding B.V. All rights reserved.

General Product Information

Product Test Conditions

LUXEON 5050 LEDs are tested with a 20ms monopulse specified below at a junction temperature, T_j, of 25°C. Forward voltage and luminous flux are binned at a T_j of 25°C, while color is hot-targeted at a T_j of 85°C.

160mA	–	LUXEON 5050 Round LES/LUXEON 5050 HE – 24V and LUXEON 5050 Square LES – 30V
640mA	–	LUXEON 5050 Round LES/LUXEON 5050 HE – 6V
800mA	–	LUXEON 5050 (Square LES) – 6V

Part Number Nomenclature

Part numbers for LUXEON 5050 follow the convention below:

L 1 5 0 – **A A B B** 5 0 **C C** 0 0 0 **D** 0

Where:

A A	–	designates nominal ANSI CCT (22=2200K, 27=2700K, 30=3000K, 35=3500K 40=4000K, 50=5000K, 57=5700K, 65=6500K)
B B	–	designates minimum CRI (70=70CRI, 80=80CRI, 90=90CRI)
C C	–	designates voltage (06=6V, 24=24V, 30=30V)
D	–	designates product type (0=Round LES, S=Square LES, H=HE)

Therefore, the following part number is used for a LUXEON 5050 Square LES, 3000K 80CRI, 30V:

L 1 5 0 – **3 0 8 0** 5 0 **3 0** 0 0 0 **S** 0

Besides, there would be custom part numbers that are derived from base part number for kitting purpose etc., and those would take the last five digits to differeniate from base part number.

Lumen Maintenance

Please contact your local Sales Representative or Lumileds Technical Solutions Manager for more information about the long-term performance of this product.

Environmental Compliance

Lumileds LLC is committed to providing environmentally friendly products to the solid-state lighting market. LUXEON 5050 is compliant to the European Union directives on the restriction of hazardous substances in electronic equipment, namely the RoHS Directive 2011/65/EU and REACH Regulation (EC) 1907/2006. Lumileds LLC will not intentionally add the following restricted materials to its products: lead, mercury, cadmium, hexavalent chromium, polybrominated biphenyls (PBB) or polybrominated diphenyl ethers (PBDE).

 ©2022 Lumileds Holding B.V. All rights reserved.

Performance Characteristics

Product Selection Guide

Table 1a. Product performance of LUXEON 5050 at rated current, T_j=25°C.

PRODUCT	NOMINAL CCT [1]	MINIMUM CRI [2, 3]	LUMINOUS FLUX [2, 3] (lm)		TYPICAL LUMINOUS EFFICACY (lm/W)	LUMINOUS FLUX [2, 3] (lm)	TYPICAL LUMINOUS EFFICACY (lm/W)	PART NUMBER
			MINIMUM	TYPICAL		TYPICAL		
			RATED CURRENT [4]			50% OF RATED CURRENT [4]		
LUXEON 5050 Round LES 24V	2200K	70	515	580	149	311	170	L150-2270502400000
	2700K	70	535	637	163	341	187	L150-2770502400000
	3000K	70	553	663	170	355	194	L150-3070502400000
	3500K	70	600	668	171	358	196	L150-3570502400000
	4000K	70	580	680	174	364	199	L150-4070502400000
	5000K	70	580	680	174	364	199	L150-5070502400000
	5700K	70	570	665	170	356	195	L150-5770502400000
	6500K	70	570	660	169	354	193	L150-6570502400000
	2200K	80	440	500	128	268	146	L150-2280502400000
	2700K	80	500	572	147	306	168	L150-2780502400000
	3000K	80	516	595	152	319	174	L150-3080502400000
	3500K	80	527	605	155	324	177	L150-3580502400000
	4000K	80	539	630	161	338	185	L150-4080502400000
	5000K	80	539	630	161	338	185	L150-5080502400000
	5700K	80	539	617	158	331	181	L150-5780502400000
	6500K	80	539	615	158	330	180	L150-6580502400000
	2700K	90	414	475	122	254	139	L150-2790502400000
	3000K	90	428	490	126	263	144	L150-3090502400000
	3500K	90	445	510	131	273	149	L150-3590502400000
	4000K	90	456	530	136	284	155	L150-4090502400000
	5000K	90	456	530	136	284	155	L150-5090502400000
	5700K	90	456	530	136	284	155	L150-5790502400000
LUXEON 5050 Round LES 6V	2200K	70	515	580	149	311	170	L150-2270500600000
	2700K	70	535	637	163	341	187	L150-2770500600000
	3000K	70	553	663	170	355	194	L150-3070500600000
	3500K	70	600	668	171	358	196	L150-3570500600000
	4000K	70	580	680	174	364	199	L150-4070500600000
	5000K	70	580	680	174	364	199	L150-5070500600000
	5700K	70	570	665	170	356	195	L150-5770500600000
	6500K	70	570	660	169	354	193	L150-6570500600000
	2200K	80	440	500	128	268	146	L150-2280500600000
	2700K	80	500	572	147	306	168	L150-2780500600000
	3000K	80	516	595	152	319	174	L150-3080500600000
	3500K	80	527	605	155	324	177	L150-3580500600000
	4000K	80	539	630	161	338	185	L150-4080500600000
	5000K	80	539	630	161	338	185	L150-5080500600000
	5700K	80	539	617	158	331	181	L150-5780500600000
	6500K	80	539	615	158	330	180	L150-6580500600000
	2700K	90	414	475	122	254	139	L150-2790500600000
	3000K	90	428	490	126	263	144	L150-3090500600000
	3500K	90	445	510	131	273	149	L150-3590500600000
	4000K	90	456	530	136	284	155	L150-4090500600000
	5000K	90	456	530	136	284	155	L150-5090500600000
	5700K	90	456	530	136	284	155	L150-5790500600000

Table 1a continued on next page:

1. Correlated color temperature is hot targeted at T_j=85°C.
2. Luminous flux and CRI are based upon mounted package on highly reflective surface at T_j=25°C. Typical CRI is approximately 2 points higher than the minimum CRI specified, but this is not guaranteed.
3. Lumileds maintains a tolerance of ±2 on CRI and ±7% on luminous flux measurements.
4. Rated current of LUXEON 5050 Round LES/LUXEON 5050 HE: 6V - 640mA, 24V - 160mA. Rated current of LUXEON 5050 Square LES: 6V - 800mA, 30V - 160mA.

 ©2022 Lumileds Holding B.V. All rights reserved.

Table 1a. Product performance of LUXEON 5050 at rated current, T_j=25°C, Continued.

PRODUCT	NOMINAL CCT [1]	MINIMUM CRI [2, 3]	LUMINOUS FLUX [2, 3] (lm)		TYPICAL LUMINOUS EFFICACY (lm/W)	LUMINOUS FLUX [2, 3] (lm)	TYPICAL LUMINOUS EFFICACY (lm/W)	PART NUMBER
			MINIMUM	TYPICAL		TYPICAL		
			RATED CURRENT [4]			50% OF RATED CURRENT [4]		
LUXEON 5050 Square LES 30V	2200K	70	621	695	143	373	163	L150-22705030000S0
	2700K	70	693	775	159	416	181	L150-27705030000S0
	3000K	70	720	803	165	431	188	L150-30705030000S0
	3500K	70	729	815	168	437	191	L150-35705030000S0
	4000K	70	743	835	172	448	195	L150-40705030000S0
	5000K	70	743	833	171	447	195	L150-50705030000S0
	5700K	70	738	823	169	442	193	L150-57705030000S0
	6500K	70	720	803	165	431	188	L150-65705030000S0
	2200K	80	586	630	130	338	147	L150-22805030000S0
	2700K	80	650	695	143	373	163	L150-27805030000S0
	3000K	80	665	730	150	392	171	L150-30805030000S0
	3500K	80	679	735	151	394	172	L150-35805030000S0
	4000K	80	700	768	158	412	180	L150-40805030000S0
	5000K	80	702	768	158	412	180	L150-50805030000S0
	5700K	80	700	768	158	412	180	L150-57805030000S0
	6500K	80	688	740	152	397	173	L150-65805030000S0
	2700K	90	558	600	123	322	140	L150-27905030000S0
	3000K	90	586	630	130	338	147	L150-30905030000S0
	3500K	90	600	640	132	343	150	L150-35905030000S0
	4000K	90	609	655	135	352	153	L150-40905030000S0
	5000K	90	618	665	137	357	156	L150-50905030000S0
	5700K	90	605	650	134	349	152	L150-57905030000S0
LUXEON 5050 Square LES 6V	2200K	70	621	695	143	373	163	L150-22705006000S0
	2700K	70	693	775	159	416	181	L150-27705006000S0
	3000K	70	720	803	165	431	188	L150-30705006000S0
	3500K	70	729	815	168	437	191	L150-35705006000S0
	4000K	70	743	835	172	448	195	L150-40705006000S0
	5000K	70	743	833	171	447	195	L150-50705006000S0
	5700K	70	738	823	169	442	193	L150-57705006000S0
	6500K	70	720	803	165	431	188	L150-65705006000S0
	2200K	80	586	630	130	338	147	L150-22805006000S0
	2700K	80	650	695	143	373	163	L150-27805006000S0
	3000K	80	665	730	150	392	171	L150-30805006000S0
	3500K	80	679	735	151	394	172	L150-35805006000S0
	4000K	80	700	768	158	412	180	L150-40805006000S0
	5000K	80	702	768	158	412	180	L150-50805006000S0
	5700K	80	700	768	158	412	180	L150-57805006000S0
	6500K	80	688	740	152	397	173	L150-65805006000S0
	2700K	90	558	600	123	322	140	L150-27905006000S0
	3000K	90	586	630	130	338	147	L150-30905006000S0
	3500K	90	600	640	132	343	150	L150-35905006000S0
	4000K	90	609	655	135	352	153	L150-40905006000S0
	5000K	90	618	665	137	357	156	L150-50905006000S0
	5700K	90	605	650	134	349	152	L150-57905006000S0

Table 1a continued on next page:

1. Correlated color temperature is hot targeted at T_j=85°C.
2. Luminous flux and CRI are based upon mounted package on highly reflective surface at T_j=25°C. Typical CRI is approximately 2 points higher than the minimum CRI specified, but this is not guaranteed.
3. Lumileds maintains a tolerance of ±2 on CRI and ±7% on luminous flux measurements.
4. Rated current of LUXEON 5050 Round LES/LUXEON 5050 HE: 6V - 640mA, 24V - 160mA. Rated current of LUXEON 5050 Square LES: 6V - 800mA, 30V - 160mA.

 ©2022 Lumileds Holding B.V. All rights reserved.

Table 1a. Product performance of LUXEON 5050 at rated current, T_j=25°C, Continued.

PRODUCT	NOMINAL CCT [1]	MINIMUM CRI [2, 3]	LUMINOUS FLUX [2, 3] (lm)		TYPICAL LUMINOUS EFFICACY (lm/W)	LUMINOUS FLUX [2, 3] (lm)	TYPICAL LUMINOUS EFFICACY (lm/W)	PART NUMBER
			MINIMUM	TYPICAL		TYPICAL		
			RATED CURRENT [4]			50% OF RATED CURRENT [4]		
LUXEON 5050 HE 24V	2200K	70	544	585	151	314	172	L150-22705024000H0
	2700K	70	602	647	167	347	190	L150-27705024000H0
	3000K	70	623	670	173	360	197	L150-30705024000H0
	3500K	70	632	680	176	365	200	L150-35705024000H0
	4000K	70	651	700	181	373	204	L150-40705024000H0
	5000K	70	651	700	181	376	206	L150-50705024000H0
	5700K	70	640	688	178	369	202	L150-57705024000H0
	6500K	70	637	685	177	368	201	L150-65705024000H0
LUXEON 5050 HE 6V	2200K	70	544	585	151	314	172	L150-22705006000H0
	2700K	70	602	647	167	347	190	L150-27705006000H0
	3000K	70	623	670	173	360	197	L150-30705006000H0
	3500K	70	632	680	176	365	200	L150-35705006000H0
	4000K	70	651	700	181	373	204	L150-40705006000H0
	5000K	70	651	700	181	376	206	L150-50705006000H0
	5700K	70	640	688	178	369	202	L150-57705006000H0
	6500K	70	637	685	177	368	201	L150-65705006000H0

Notes for Table 1a:
1. Correlated color temperature is hot targeted at T_j=85°C.
2. Luminous flux and CRI are based upon mounted package on highly reflective surface at T_j=25°C. Typical CRI is approximately 2 points higher than the minimum CRI specified, but this is not guaranteed.
3. Lumileds maintains a tolerance of ±2 on CRI and ±7% on luminous flux measurements.
4. Rated current of LUXEON 5050 Round LES/LUXEON 5050 HE: 6V - 640mA, 24V - 160mA. Rated current of LUXEON 5050 Square LES: 6V - 800mA, 30V - 160mA.

Table 1b. Product performance of LUXEON 5050 for horticulture at rated current, T_j=25°C.

PRODUCT	NOMINAL CCT [1]	MINIMUM CRI [2, 3]	PPF (umol/s) [2, 3, 4]		PPF/W TYPICAL (umol/J)	PART NUMBER
			MINIMUM	TYPICAL		
LUXEON 5050 Round LES 24V	2200K	70	7.50	8.32	2.13	L150-2270502400000
	2700K	70	7.28	8.53	2.18	L150-2770502400000
	3000K	70	7.66	8.69	2.23	L150-3070502400000
	3500K	70	8.30	8.75	2.24	L150-3570502400000
	4000K	70	7.10	8.84	2.26	L150-4070502400000
	5000K	70	8.01	8.90	2.28	L150-5070502400000
	5700K	70	8.02	8.84	2.27	L150-5770502400000
	6500K	70	8.04	8.86	2.27	L150-6570502400000
	2200K	80	6.94	7.85	2.01	L150-2280502400000
	2700K	80	7.20	8.14	2.09	L150-2780502400000
	3000K	80	7.16	8.34	2.14	L150-3080502400000
	3500K	80	5.40	8.42	2.16	L150-3580502400000
	4000K	80	7.95	8.59	2.20	L150-4080502400000
	5000K	80	7.74	8.60	2.20	L150-5080502400000
	5700K	80	7.75	8.55	2.19	L150-5780502400000
	6500K	80	8.00	8.60	2.20	L150-6580502400000
	2700K	90	6.77	7.59	1.94	L150-2790502400000
	3000K	90	6.97	7.75	1.98	L150-3090502400000
	3500K	90	7.23	7.90	2.02	L150-3590502400000
	4000K	90	7.58	8.17	2.09	L150-4090502400000
	5000K	90	7.67	8.13	2.08	L150-5090502400000
	5700K	90	7.49	8.08	2.07	L150-5790502400000

Table 1b continued on next page:
1. Correlated color temperature is hot targeted at T_j=85°C.
2. CRI and PPF are specified at T_j =25°. Typical CRI is approximately 2 points higher than the minimum CRI specified, but this is not guaranteed.
3. Lumileds maintains a tolerance of ±2 on CRI and ±7.5% on PPF.
4. PPF data is calculated from luminous flux measurements.

 ©2022 Lumileds Holding B.V. All rights reserved.

Table 1b. Product performance of LUXEON 5050 for horticulture at rated current, T_j=25°C, Continued.

PRODUCT	NOMINAL CCT [1]	MINIMUM CRI [2, 3]	PPF (umol/s) [2, 3, 4]		PPF/W TYPICAL (umol/J)	PART NUMBER
			MINIMUM	TYPICAL		
LUXEON 5050 Round LES 6V	2200K	70	7.50	8.32	2.13	L150-2270500600000
	2700K	70	7.28	8.53	2.18	L150-2770500600000
	3000K	70	7.66	8.69	2.23	L150-3070500600000
	3500K	70	8.30	8.75	2.24	L150-3570500600000
	4000K	70	7.10	8.84	2.26	L150-4070500600000
	5000K	70	8.01	8.90	2.28	L150-5070500600000
	5700K	70	8.02	8.84	2.27	L150-5770500600000
	6500K	70	8.04	8.86	2.27	L150-6570500600000
	2200K	80	6.94	7.85	2.01	L150-2280500600000
	2700K	80	7.20	8.14	2.09	L150-2780500600000
	3000K	80	7.16	8.34	2.14	L150-3080500600000
	3500K	80	5.40	8.42	2.16	L150-3580500600000
	4000K	80	7.95	8.59	2.20	L150-4080500600000
	5000K	80	7.74	8.60	2.20	L150-5080500600000
	5700K	80	7.75	8.55	2.19	L150-5780500600000
	6500K	80	8.00	8.60	2.20	L150-6580500600000
	2700K	90	6.77	7.59	1.94	L150-2790500600000
	3000K	90	6.97	7.75	1.98	L150-3090500600000
	3500K	90	7.23	7.90	2.02	L150-3590500600000
	4000K	90	7.58	8.17	2.09	L150-4090500600000
	5000K	90	7.67	8.13	2.08	L150-5090500600000
	5700K	90	7.49	8.08	2.07	L150-5790500600000
LUXEON 5050 Square LES 30V	2200K	70	9.03	10.03	2.06	L150-22705030000S0
	2700K	70	9.36	10.43	2.14	L150-27705030000S0
	3000K	70	9.71	10.61	2.17	L150-30705030000S0
	3500K	70	9.53	10.45	2.14	L150-35705030000S0
	4000K	70	9.68	10.67	2.19	L150-40705030000S0
	5000K	70	9.69	10.75	2.20	L150-50705030000S0
	5700K	70	9.98	10.78	2.21	L150-57705030000S0
	6500K	70	9.56	10.68	2.19	L150-65705030000S0
	2200K	80	9.23	9.85	2.02	L150-22805030000S0
	2700K	80	9.29	9.97	2.04	L150-27805030000S0
	3000K	80	9.70	10.24	2.10	L150-30805030000S0
	3500K	80	9.25	10.12	2.07	L150-35805030000S0
	4000K	80	9.87	10.52	2.16	L150-40805030000S0
	5000K	80	9.93	10.66	2.18	L150-50805030000S0
	5700K	80	9.76	10.67	2.19	L150-57805030000S0
	6500K	80	10.26	10.59	2.17	L150-65805030000S0
	2700K	90	9.55	9.82	2.01	L150-27905030000S0
	3000K	90	9.48	10.09	2.07	L150-30905030000S0
	3500K	90	9.48	10.06	2.06	L150-35905030000S0
	4000K	90	9.81	10.16	2.08	L150-40905030000S0
	5000K	90	9.88	10.23	2.10	L150-50905030000S0
	5700K	90	9.87	10.28	2.11	L150-57905030000S0

Table 1b continued on next page:

1. Correlated color temperature is hot targeted at T_j=85°C.
2. CRI and PPF are specified at T_j =25°. Typical CRI is approximately 2 points higher than the minimum CRI specified, but this is not guaranteed.
3. Lumileds maintains a tolerance of ±2 on CRI and ±7.5% on PPF.
4. PPF data is calculated from luminous flux measurements.

 ©2022 Lumileds Holding B.V. All rights reserved.

Table 1b. Product performance of LUXEON 5050 for horticulture at rated current, T_j=25°C, Continued.

PRODUCT	NOMINAL CCT [1]	MINIMUM CRI [2, 3]	PPF (umol/s) [2, 3, 4]		PPF/W TYPICAL (umol/J)	PART NUMBER
			MINIMUM	TYPICAL		
LUXEON 5050 Square LES 6V	2200K	70	9.03	10.03	2.06	L150-22705006000S0
	2700K	70	9.36	10.43	2.14	L150-27705006000S0
	3000K	70	9.71	10.61	2.17	L150-30705006000S0
	3500K	70	9.53	10.45	2.14	L150-35705006000S0
	4000K	70	9.68	10.67	2.19	L150-40705006000S0
	5000K	70	9.69	10.75	2.20	L150-50705006000S0
	5700K	70	9.98	10.78	2.21	L150-57705006000S0
	6500K	70	9.56	10.68	2.19	L150-65705006000S0
	2200K	80	9.23	9.85	2.02	L150-22805006000S0
	2700K	80	9.29	9.97	2.04	L150-27805006000S0
	3000K	80	9.70	10.24	2.10	L150-30805006000S0
	3500K	80	9.25	10.12	2.07	L150-35805006000S0
	4000K	80	9.87	10.52	2.16	L150-40805006000S0
	5000K	80	9.93	10.66	2.18	L150-50805006000S0
	5700K	80	9.76	10.67	2.19	L150-57805006000S0
	6500K	80	10.26	10.59	2.17	L150-65805006000S0
	2700K	90	9.55	9.82	2.01	L150-27905006000S0
	3000K	90	9.48	10.09	2.07	L150-30905006000S0
	3500K	90	9.48	10.06	2.06	L150-35905006000S0
	4000K	90	9.81	10.16	2.08	L150-40905006000S0
	5000K	90	9.88	10.23	2.10	L150-50905006000S0
	5700K	90	9.87	10.28	2.11	L150-57905006000S0
LUXEON 5050 HE 24V	2200K	70	8.06	8.47	2.19	L150-22705024000H0
	2700K	70	8.38	8.73	2.25	L150-27705024000H0
	3000K	70	8.29	8.86	2.29	L150-30705024000H0
	3500K	70	8.21	8.87	2.29	L150-35705024000H0
	4000K	70	8.42	9.07	2.34	L150-40705024000H0
	5000K	70	8.61	9.19	2.37	L150-50705024000H0
	5700K	70	9.00	9.20	2.38	L150-57705024000H0
	6500K	70	8.58	9.22	2.38	L150-65705024000H0
LUXEON 5050 HE 6V	2200K	70	8.06	8.47	2.19	L150-22705006000H0
	2700K	70	8.38	8.73	2.25	L150-27705006000H0
	3000K	70	8.29	8.86	2.29	L150-30705006000H0
	3500K	70	8.21	8.87	2.29	L150-35705006000H0
	4000K	70	8.42	9.07	2.34	L150-40705006000H0
	5000K	70	8.61	9.19	2.37	L150-50705006000H0
	5700K	70	9.00	9.20	2.38	L150-57705006000H0
	6500K	70	8.58	9.22	2.38	L150-65705006000H0

Notes for Table 1b:
1. Correlated color temperature is hot targeted at T_j=85°C.
2. CRI and PPF are specified at T_j =25°. Typical CRI is approximately 2 points higher than the minimum CRI specified, but this is not guaranteed.
3. Lumileds maintains a tolerance of ±2 on CRI and ±7.5% on PPF.
4. PPF data is calculated from luminous flux measurements.

 ©2022 Lumileds Holding B.V. All rights reserved.

Optical Characteristics

Table 2. Optical characteristics for LUXEON 5050 at test current, T_j=25°C.

PART NUMBER	TYPICAL TOTAL INCLUDED ANGLE [1]	TYPICAL VIEWING ANGLE [2]
L150-xxxx50xx000x0	138°	116°

Notes for Table 2:
1. Total angle at which 90% of total luminous flux is captured.
2. Viewing angle is the off axis angle from the LED centerline where the luminous intensity is ½ of the peak value.

Electrical and Thermal Characteristics

Table 3. Electrical and thermal characteristics for LUXEON 5050 at test current, T_j=25°C.

PART NUMBER	FORWARD VOLTAGE [1] (V_f)			TYPICAL TEMPERATURE COEFFICIENT OF FORWARD VOLTAGE [2] (mV/°C)	TYPICAL THERMAL RESISTANCE—JUNCTION TO SOLDER PAD (°C/W)
	MINIMUM	TYPICAL	MAXIMUM		
L150-xxxx502400000	23.5	24.4	26.5	-12	2.4
L150-xxxx500600000	5.8	6.1	6.6	-3	2.4
L150-xxxx5030000S0	29.0	30.5	32.0	-15	1.4
L150-xxxx5006000S0	5.8	6.1	6.6	-3	1.4
L150-xxxx5024000H0	22.7	24.2	25.8	-12	2.2
L150-xxxx5006000H0	5.6	6.05	6.4	-3	2.2

Notes for Table 3:
1. Lumileds maintains a tolerance of ±0.1V on forward voltage measurements.
2. Measured between 25°C and 85°C.

Absolute Maximum Ratings

Table 4. Absolute maximum ratings for LUXEON 5050.

PARAMETER	MAXIMUM PERFORMANCE
DC Forward Current [1, 2]	240mA for L150-xxxx502400000 800mA for L150-xxxx500600000 240mA for L150-xxxx5030000S0 1000mA for L150-xxxx5006000S0 240mA for L150-xxxx5024000H0 800mA for L150-xxxx5006000H0
Peak Pulsed Forward Current [1, 3]	300mA for L150-xxxx502400000 1000mA for L150-xxxx500600000 300mA for L150-xxxx5030000S0 1250mA for L150-xxxx5006000S0 300mA for L150-xxxx5024000H0 1000mA for L150-xxxx5006000H0
LED Junction Temperature [1] (DC & Pulse)	125°C
ESD Sensitivity (ANSI/ESDA/JEDEC JS-001-2012)	Class 2
Operating Case Temperature [1]	-40°C to 105°C
LED Storage Temperature	-40°C to 105°C
Allowable Reflow Cycles	3
Reverse Voltage ($V_{reverse}$)	LUXEON LEDs are not designed to be driven in reverse bias

Notes for Table 4:
1. Proper current derating must be observed to maintain the junction temperature below the maximum allowable junction temperature.
2. Residual periodic variations due to power conversion from alternating current (AC) to direct current (DC), also called "ripple," are acceptable if the following conditions are met:
   – The frequency of the ripple current is 100Hz or higher
   – The average current for each cycle does not exceed the maximum allowable DC forward current
   – The maximum amplitude of the ripple does not exceed the maximum peak pulsed forward current
3. At ≤50% duty cycle with pulse width of 5ms.

 ©2022 Lumileds Holding B.V. All rights reserved.

Characteristic Curves

Spectral Power Distribution Characteristics

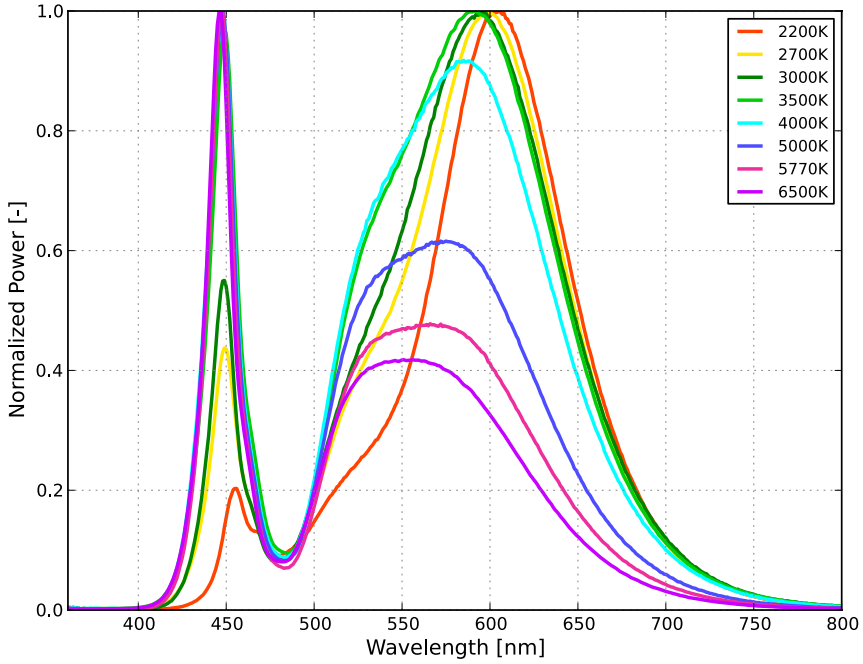

Figure 1a. Typical normalized power vs. wavelength for L150-xx7050xx000x0 at test current, T_j=25°C.

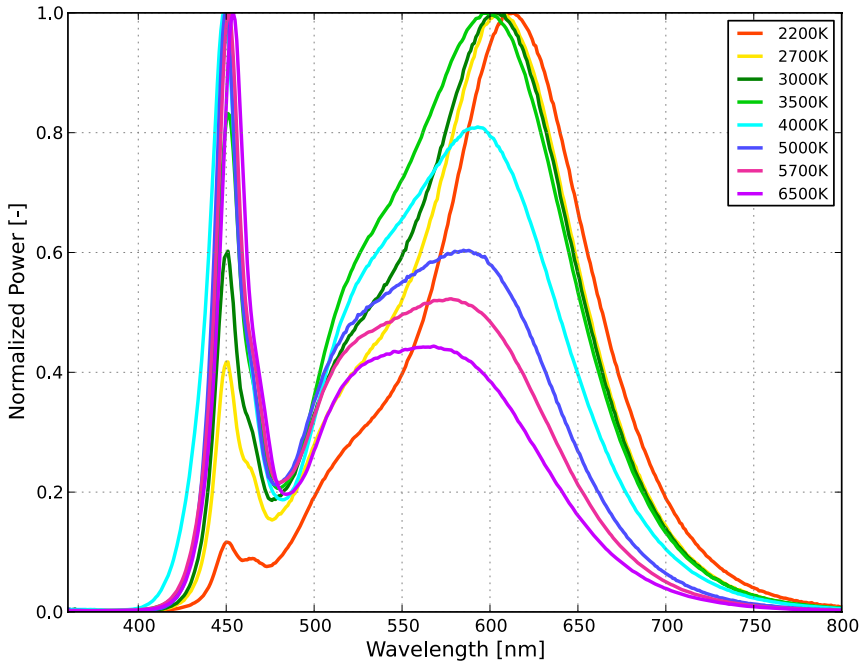

Figure 1b. Typical normalized power vs. wavelength for L150-xx8050xx000x0 at test current, T_j=25°C.

 ©2022 Lumileds Holding B.V. All rights reserved.

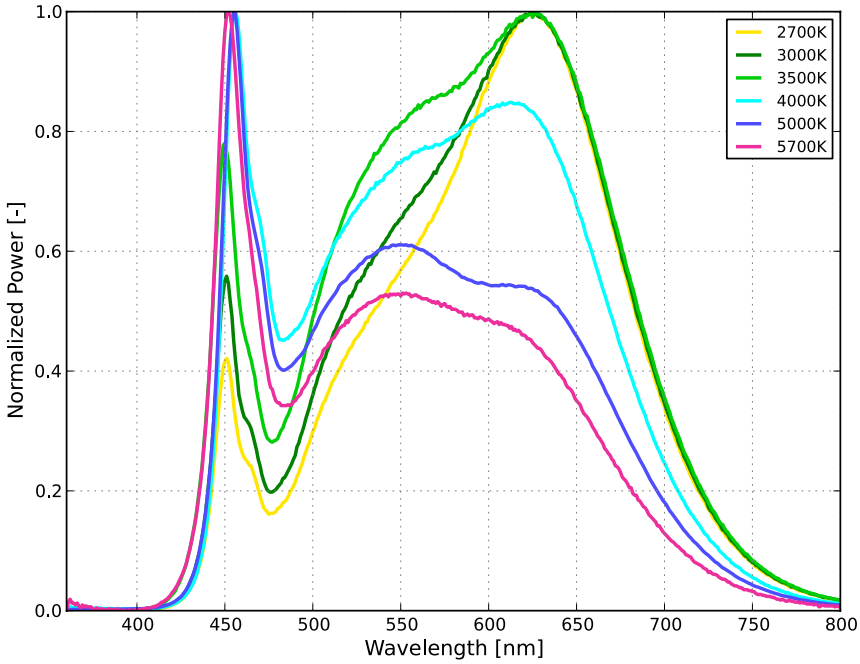

Figure 1c. Typical normalized power vs. wavelength for L150-xx9050xx000x0 at test current, T_j=25°C.

Light Output Characteristics

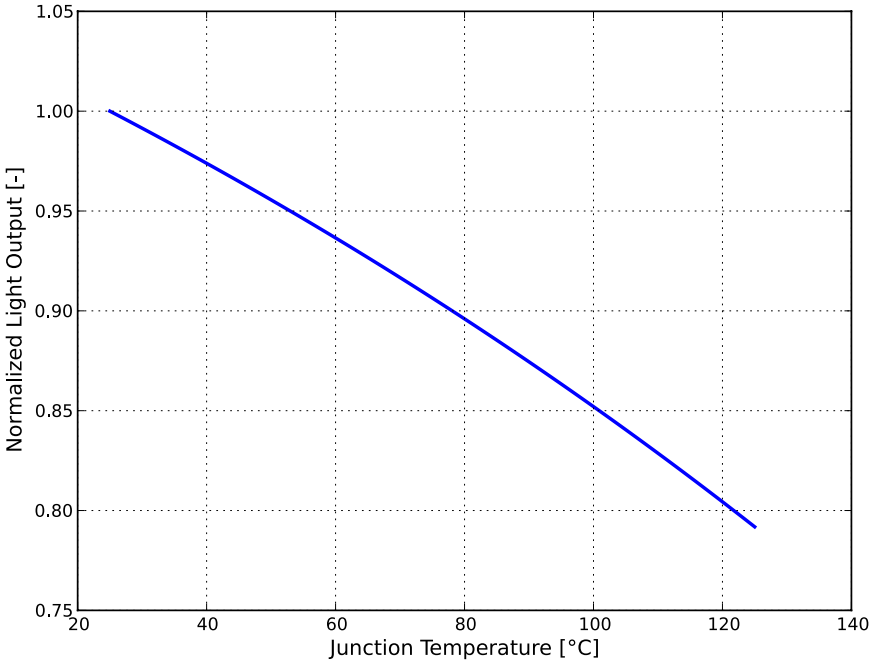

Figure 2. Typical normalized light output vs. junction temperature for L150-xxxx50xx000x0 at specified test current.

 ©2022 Lumileds Holding B.V. All rights reserved.

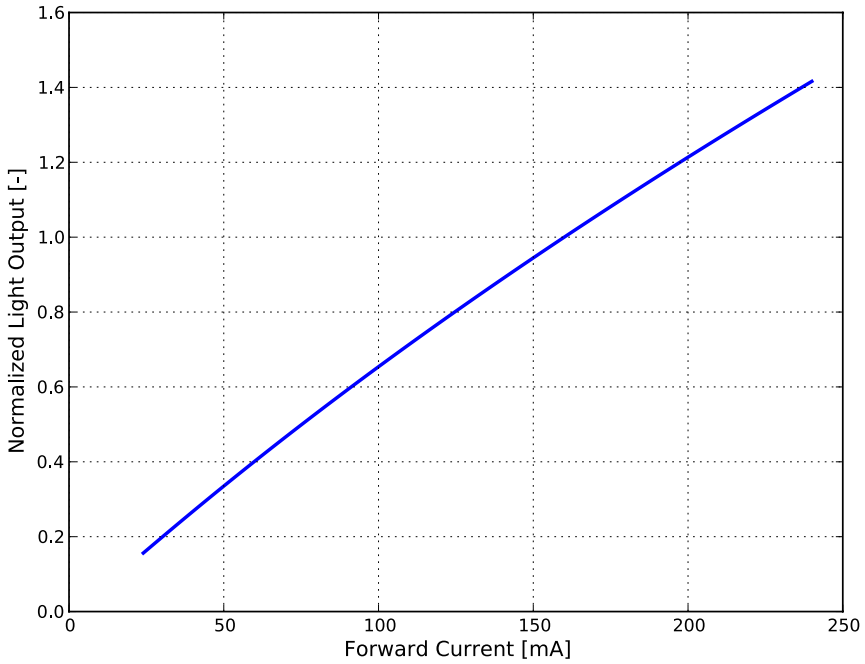

Figure 3a. Typical normalized light output vs. forward current for L150-xxxx5024000x0 and L150-xxxx5030000x0, T_j=25°C.

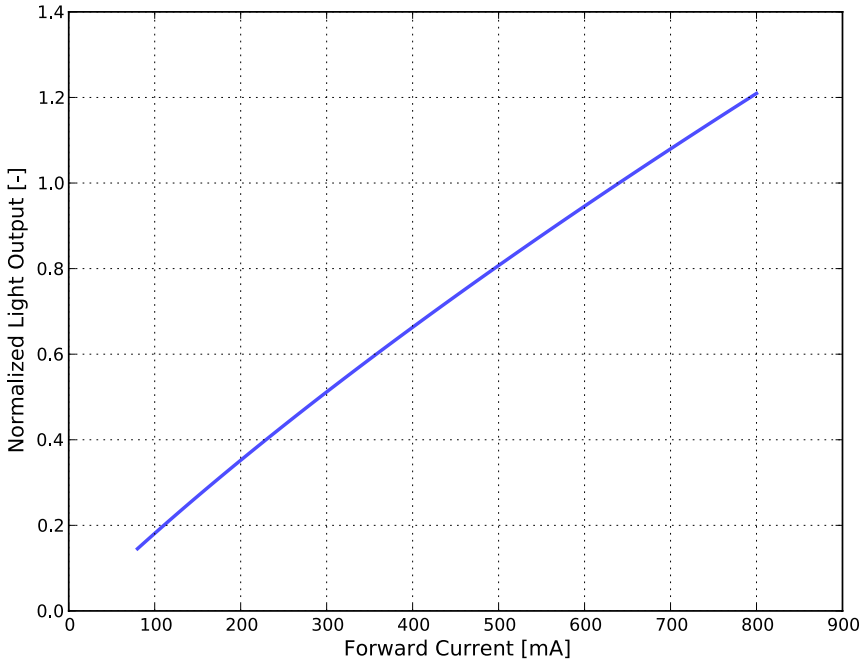

Figure 3b. Typical normalized light output vs. forward current for L150-xxxx500600000 and L150-xxxx5006000H0, T_j=25°C.

 ©2022 Lumileds Holding B.V. All rights reserved.

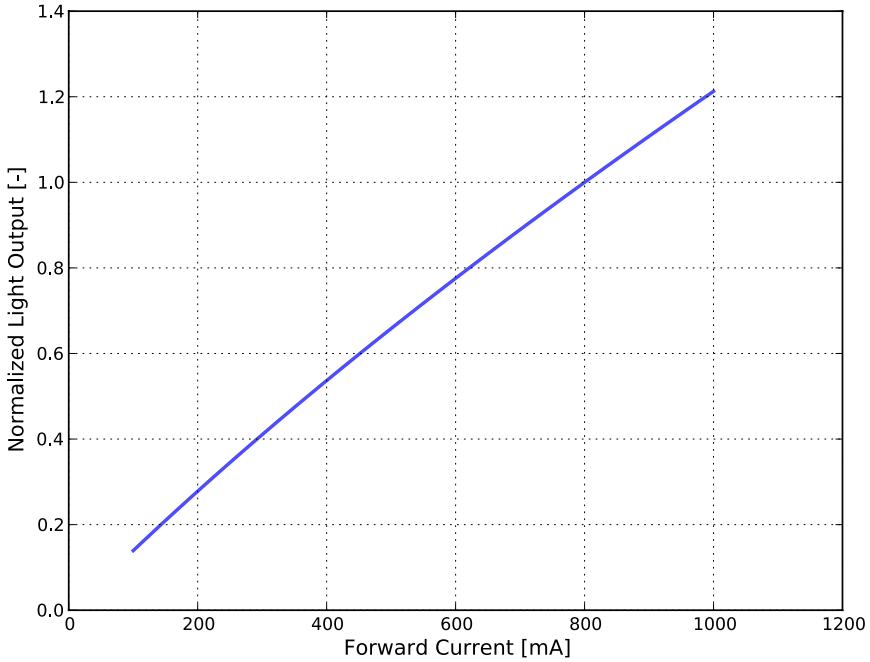

Figure 3c. Typical normalized light output vs. forward current for L150-xxxx5006000S0, T_j=25°C.

Forward Current Characteristics

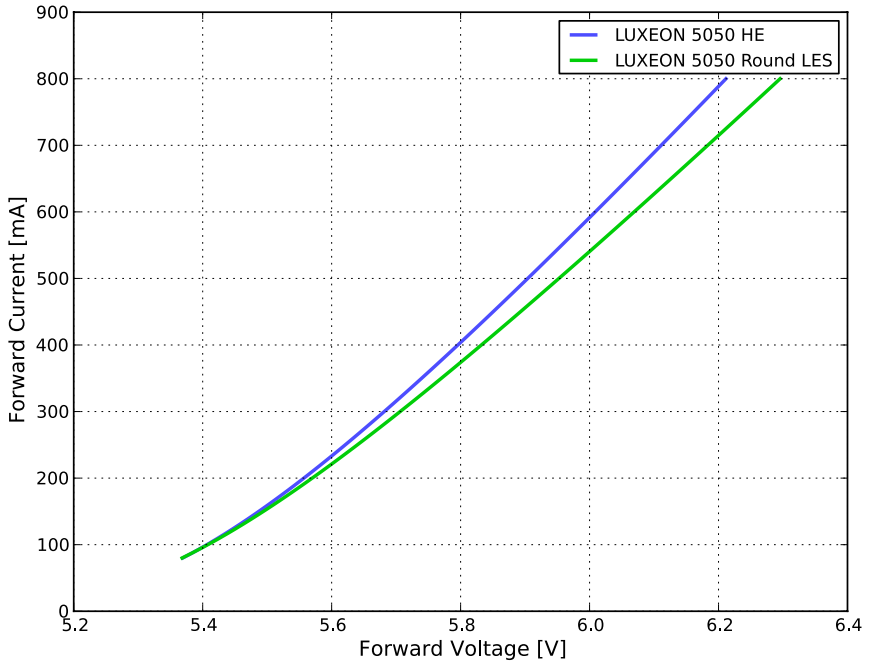

Figure 4a. Typical forward current vs. forward voltage for L150-xxxx502400000 and L150-xxxx5024000H0, T_j=25°C.

 ©2022 Lumileds Holding B.V. All rights reserved.

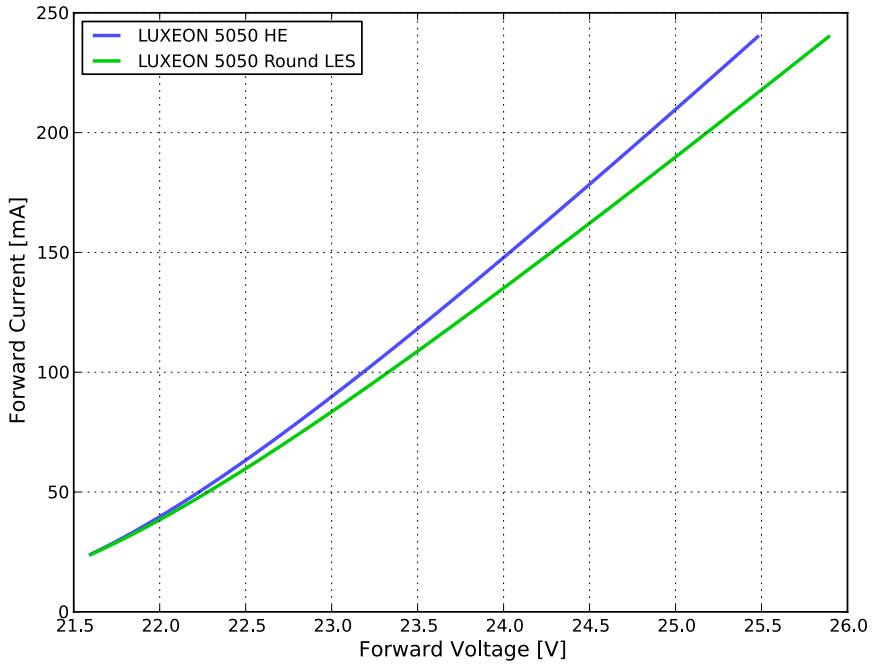

Figure 4b. Typical forward current vs. forward voltage for L150-xxxx500600000, T_j=25°C.

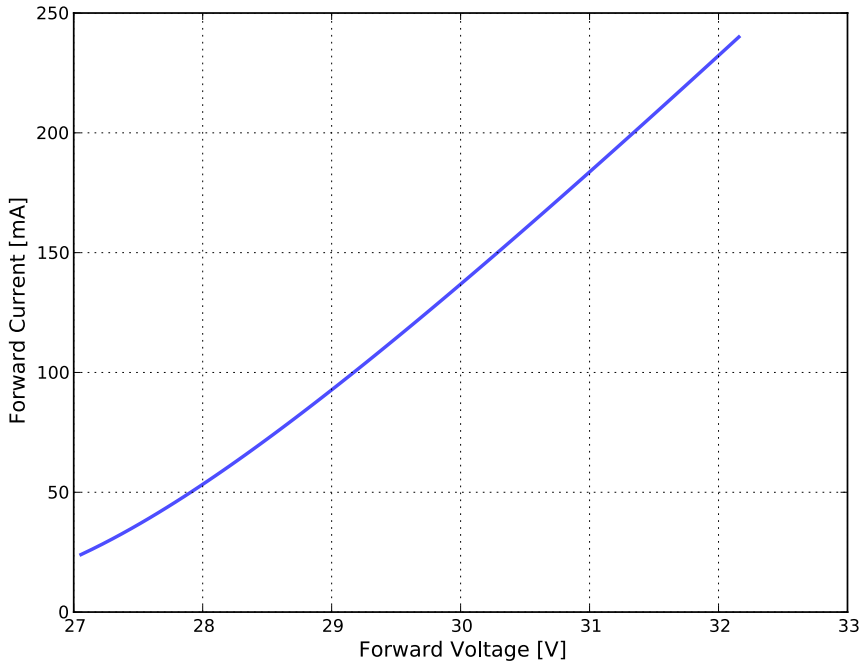

Figure 4c. Typical forward current vs. forward voltage for L150-xxxx5030000S0, Tj=25°C.

 ©2022 Lumileds Holding B.V. All rights reserved.

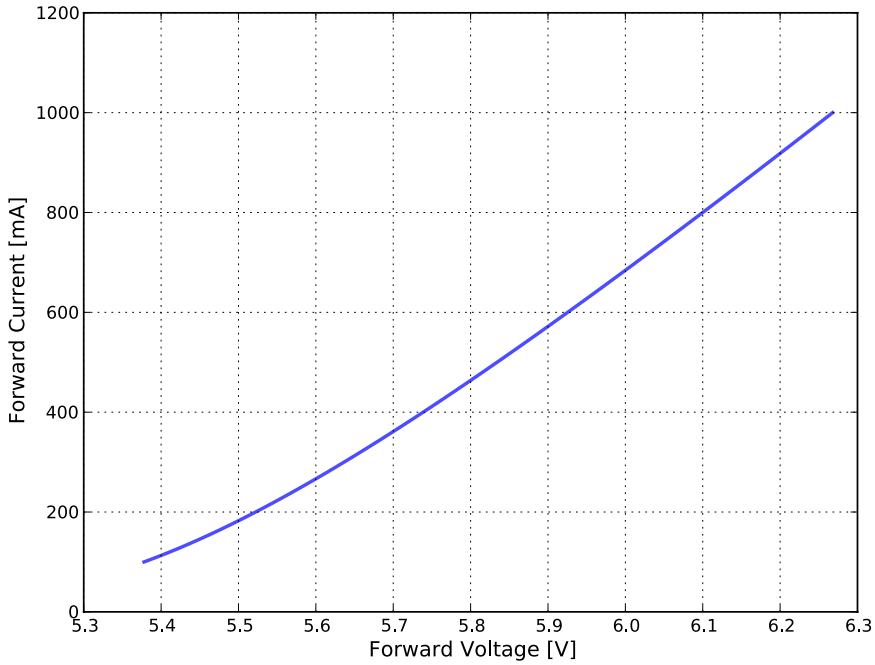

Figure 4d. Typical forward current vs. forward voltage for L150-xxxx5006000S0, T_j=25°C.

Radiation Pattern Characteristics

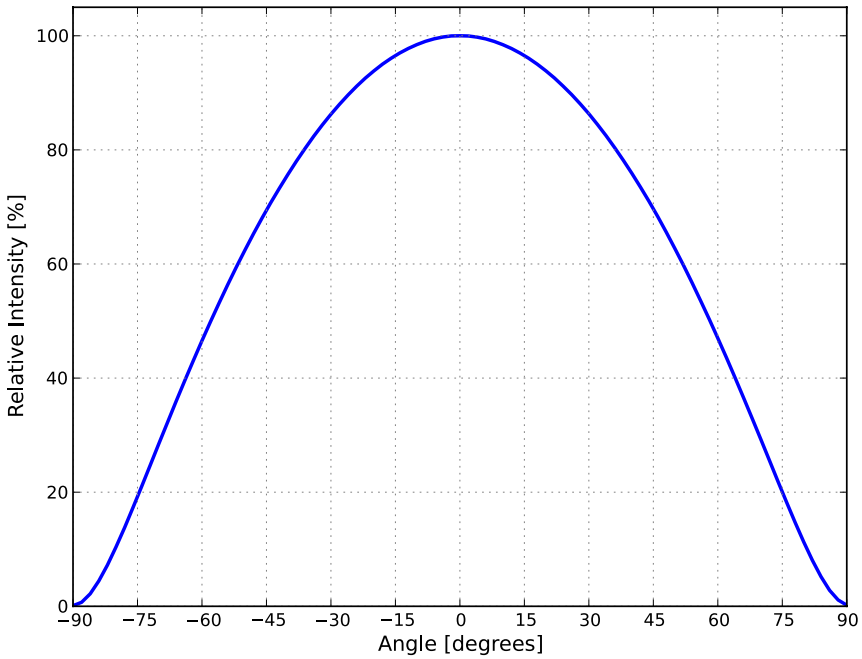

Figure 5. Typical radiation pattern for L150-xxxx50xx000x0 at test current, T_j=25°C.

 ©2022 Lumileds Holding B.V. All rights reserved.

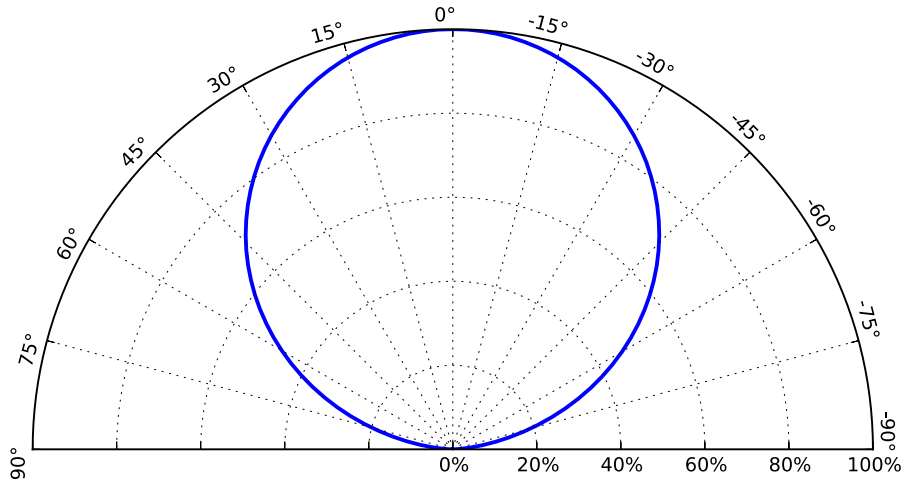

Figure 6. Typical polar radiation pattern for L150-xxxx50xx000x0 at test current, T_j=25°C.

Product Bin and Labeling Definitions

Decoding Product Bin Labeling

In the manufacturing of semiconductor products, there are variations in performance around the average values given in the technical datasheet. For this reason, Lumileds bins LED components for luminous flux or radiometric power, color point, peak or dominant wavelength and forward voltage.

LUXEON 5050 (Round LES) LEDs are labeled using a 4-digit alphanumeric CAT code following the format below:

A B C C

Where:

A – designates luminous flux bin (example: L=600 to 650 lm, M=650 to 700 lm)

B – designates color bin (example: 3=3 SDCM, 5=5 SDCM parts)

C C – designates forward voltage bin (example: A1, A2, B1, B2)

Therefore, a LUXEON 5050 (Round LES) with a lumen range of 600 to 650 lm, color bin of 3 and forward voltage range of 23.5 to 24.2V has the following CAT code:

L 3 A 1

 ©2022 Lumileds Holding B.V. All rights reserved.

LUXEON 5050 (Square LES) LEDs are labeled using a 4-digit alphanumeric CAT code following the format below:

A B B C

Where:

A – designates luminous flux bin (example: L=600 to 650 lm, M=650 to 700 lm)

B B – designates color bin: (example: 83=2700K and 3 SDCM, 35=5000K and 5 SDCM)

C – designates forward voltage bin (example: A, B, C, D)

Therefore, a LUXEON 5050 (Square LES) with a lumen range of 600 to 650 lm, color bin of 83 and forward voltage range of 29.0 to 30.0V has the following CAT code:

L 8 3 A

Luminous Flux Bins

Table 5 lists the standard luminous flux bins for LUXEON 5050 LEDs. Although several bins are outlined, product availability in a particular bin varies by production run and by product performance. Not all bins are available in all CCTs.

Table 5a. Luminous flux bin definitions for LUXEON 5050 Round LES and Square LES, T_j=25°C.

BIN	LUMINOUS FLUX [1] (lm)	
	MINIMUM	MAXIMUM
G	400	450
H	450	500
J	500	550
K	550	600
L	600	650
M	650	700
N	700	750
P	750	800
Q	800	850
R	850	900
S	900	950
T	950	1000

Notes for Table 5a:
1. Lumileds maintains a tolerance of ±7% on luminous flux measurements.

 ©2022 Lumileds Holding B.V. All rights reserved.

Table 5b. Luminous flux bin definitions for LUXEON 5050 HE, T_j=25°C.

BIN	LUMINOUS FLUX [1] (lm)	
	MINIMUM	MAXIMUM
B	425	450
C	450	475
D	475	500
E	500	525
F	525	550
G	550	575
H	575	600
J	600	625
K	625	650
L	650	675
M	675	700
N	700	725
P	725	750
Q	750	775

Notes for Table 5b:
1. Lumileds maintains a tolerance of ±7% on luminous flux measurements.

 ©2022 Lumileds Holding B.V. All rights reserved.

Color Bin Definitions

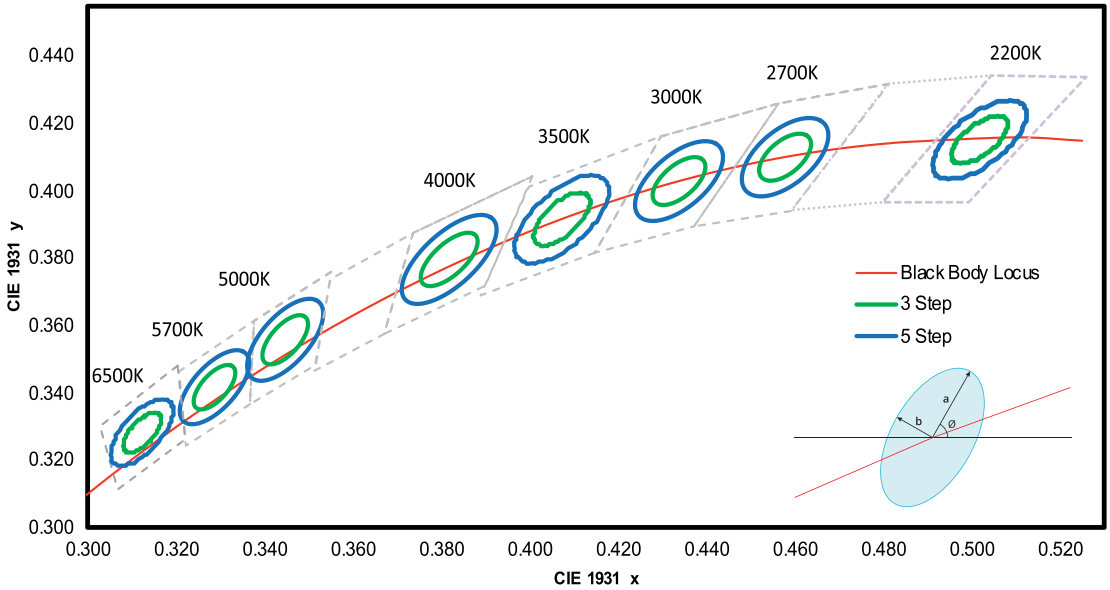

Figure 7. 3- and 5-step MacAdam ellipse illustration for hot-color targeting expected at 85°C.

Table 6. 3- and 5-step MacAdam ellipse color bin definitions for LUXEON 5050 at test current, hot-color targeted at T_j=85°C.

NOMINAL CCT	COLOR SPACE	CENTER POINT [1] (cx, cy)	MAJOR AXIS, a	MINOR AXIS, b	ELLIPSE ROTATION ANGLE, θ	LUXEON 5050 ROUND LES AND LUXEON 5050 HE COLOR BIN CODE	LUXEON 5050 SQUARE LES COLOR BIN CODE
2200K	Single 3-step MacAdam ellipse	(0.5018, 0.4153)	0.00863	0.00398	49.27°	3	A3
2700K	Single 3-step MacAdam ellipse	(0.4578, 0.4101)	0.00810	0.00420	53.70°	3	83
3000K	Single 3-step MacAdam ellipse	(0.4338, 0.4030)	0.00834	0.00408	53.22°	3	73
3500K	Single 3-step MacAdam ellipse	(0.4073, 0.3917)	0.00927	0.00414	54.00°	3	63
4000K	Single 3-step MacAdam ellipse	(0.3818, 0.3797)	0.00939	0.00402	53.72°	3	53
5000K	Single 3-step MacAdam ellipse	(0.3447, 0.3558)	0.00822	0.00354	59.62°	3	33
5700K	Single 3-step MacAdam ellipse	(0.3287, 0.3417)	0.00745	0.00320	59.09°	3	23
6500K	Single 3-step MacAdam ellipse	(0.3123, 0.3282)	0.00669	0.00285	58.57°	3	13
2200K	Single 5-step MacAdam ellipse	(0.5018, 0.4153)	0.01438	0.00663	49.27°	5	A5
2700K	Single 5-step MacAdam ellipse	(0.4578, 0.4101)	0.01350	0.00700	53.70°	5	85
3000K	Single 5-step MacAdam ellipse	(0.4338, 0.4030)	0.01390	0.00680	53.22°	5	75
3500K	Single 5-step MacAdam ellipse	(0.4073, 0.3917)	0.01545	0.00690	54.00°	5	65
4000K	Single 5-step MacAdam ellipse	(0.3818, 0.3797)	0.01565	0.00670	53.72°	5	55
5000K	Single 5-step MacAdam ellipse	(0.3447, 0.3558)	0.01370	0.00590	59.62°	5	35
5700K	Single 5-step MacAdam ellipse	(0.3287, 0.3417)	0.01243	0.00533	59.09°	5	25
6500K	Single 5-step MacAdam ellipse	(0.3123, 0.3282)	0.01115	0.00475	58.57°	5	15

Notes for Table 6:
1. Lumileds maintains a tolerance of ±0.005 on x and y coordinates in the CIE 1931 color space.

 ©2022 Lumileds Holding B.V. All rights reserved.

Forward Voltage Bins

Table 7. Forward voltage bin definitions for LUXEON 5050, T_j=25°C.

PART NUMBER	BIN	FORWARD VOLTAGE [1] (V_f)	
		MINIMUM	MAXIMUM
L150-xxxx502400000	A1	23.5	24.2
	A2	24.2	25.0
	B1	25.0	25.8
	B2	25.8	26.5
L150-xxxx500600000	A1	5.8	6.0
	A2	6.0	6.2
	B1	6.2	6.4
	B2	6.4	6.6
L150-xxxx5030000S0	A	29.0	30.0
	B	30.0	31.0
	C	31.0	32.0
L150-xxxx5006000S0	A	5.8	6.0
	B	6.0	6.2
	C	6.2	6.4
	D	6.4	6.6
L150-xxxx5024000H0	A0	22.7	23.5
	A1	23.5	24.2
	A2	24.2	25.0
	B1	25.0	25.8
L150-xxxx5006000H0	A0	5.6	5.8
	A1	5.8	6.0
	A2	6.0	6.2
	B1	6.2	6.4

Notes for Table 7:
1. Lumileds maintains a tolerance of ±0.1V on forward voltage measurements.

 ©2022 Lumileds Holding B.V. All rights reserved.

Mechanical Dimensions

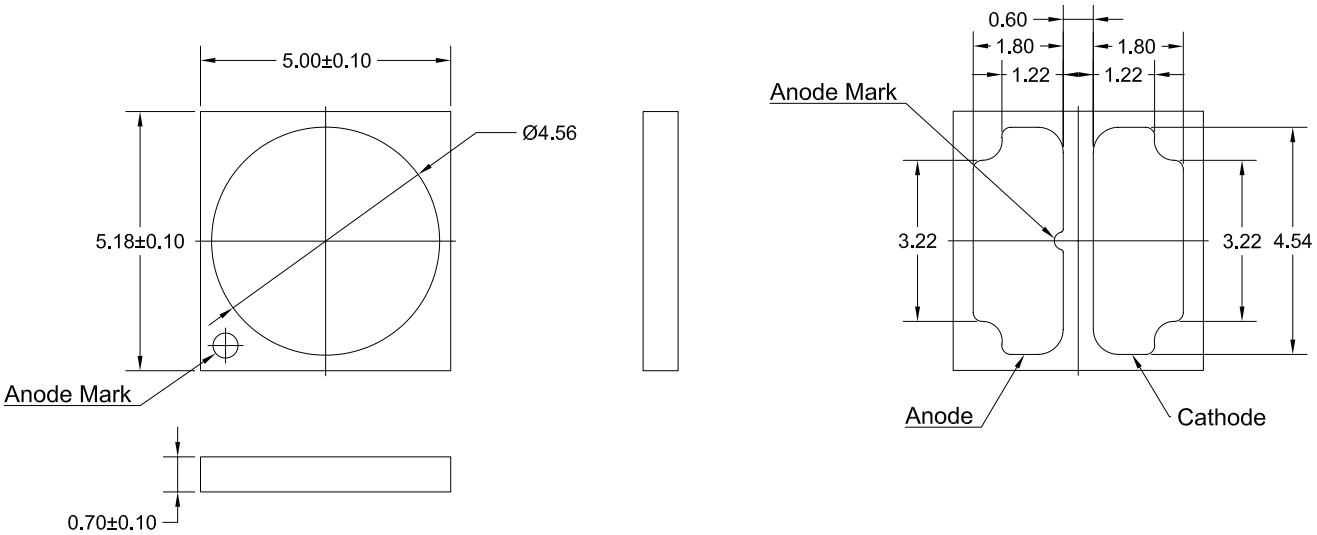

Figure 8a. Mechanical dimensions for LUXEON 5050 Round LES.

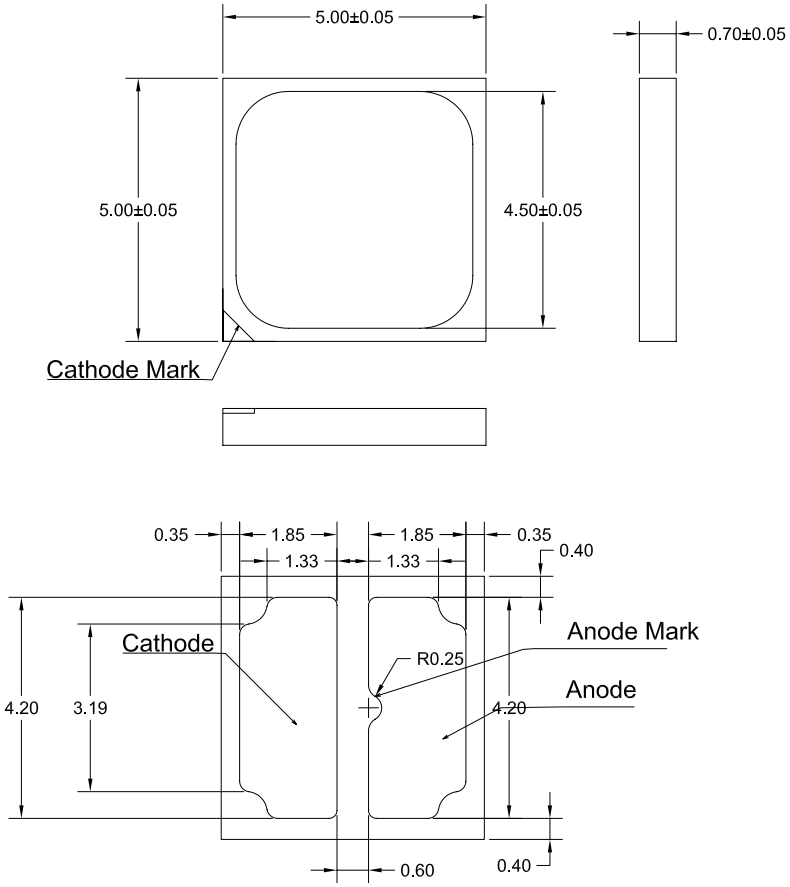

Figure 8b. Mechanical dimensions for LUXEON 5050 Square LES.

Notes for Figures 8a and 8b:
1. Drawings are not to scale.
2. All dimensions are in millimeters.

 ©2022 Lumileds Holding B.V. All rights reserved.

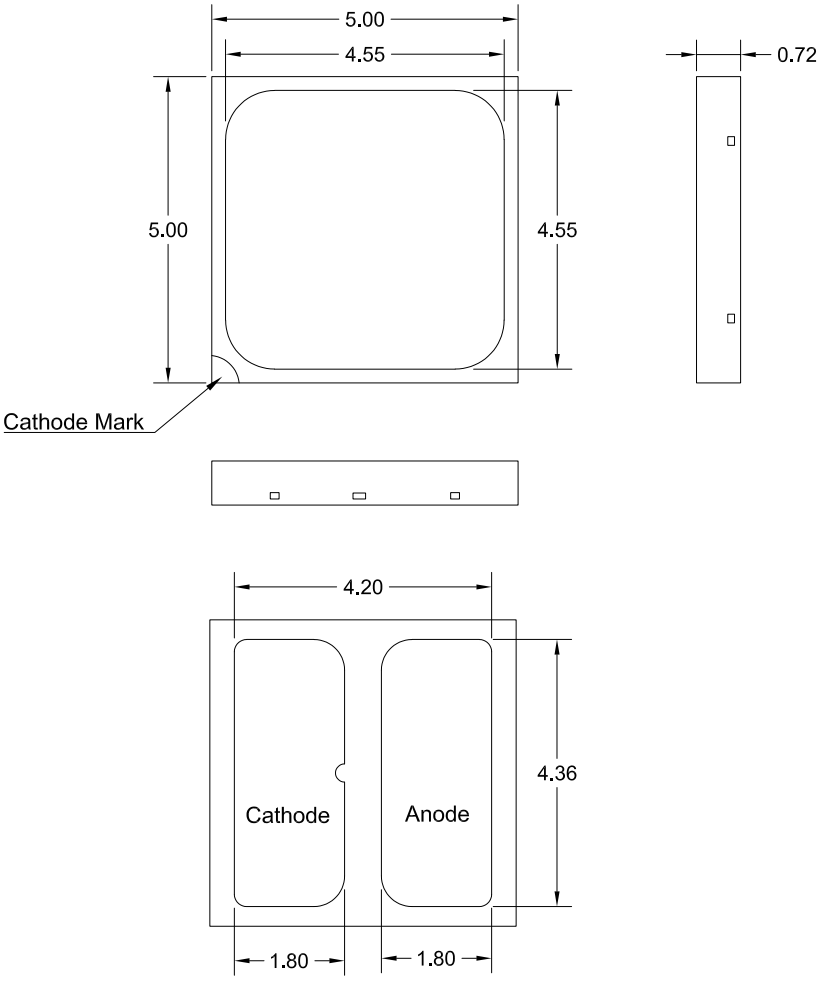

Figure 8c. Mechanical dimensions for LUXEON 5050 HE.

Notes for Figure 8c:
1. Drawings are not to scale.
2. All dimensions are in millimeters.

 ©2022 Lumileds Holding B.V. All rights reserved.

Reflow Soldering Guidelines

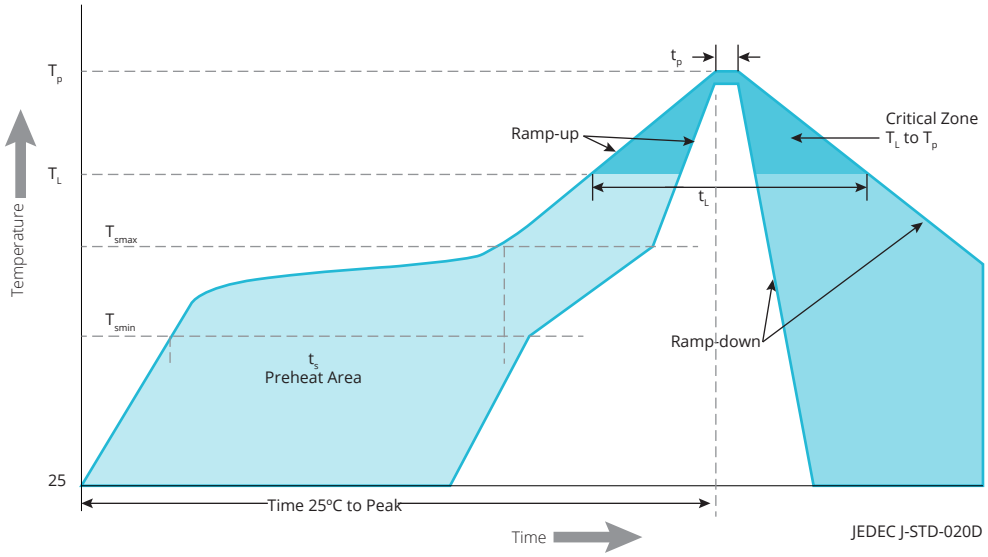

Figure 9. Visualization of the acceptable reflow temperature profile as specified in Table 8.

Table 8. Reflow profile characteristics for LUXEON 5050.

PROFILE FEATURE	LEAD-FREE ASSEMBLY
Preheat Minimum Temperature (T_{smin})	150°C
Preheat Maximum Temperature (T_{smax})	200°C
Preheat Time (t_{smin} to t_{smax})	60 to 180 seconds
Ramp-Up Rate (T_L to T_p)	3°C / second maximum
Liquidous Temperature (T_L)	217°C
Time Maintained Above Temperature T_L (t_L)	60 to 150 seconds
Peak / Classification Temperature (T_p)	260°C
Time Within 5°C of Actual Peak Temperature (t_p)	20 to 40 seconds
Ramp-Down Rate (T_p to T_L)	6°C / second maximum
Time 25°C to Peak Temperature	8 minutes maximum

JEDEC Moisture Sensitivity

Table 9. Moisture sensitivity levels for LUXEON 5050.

LEVEL	FLOOR LIFE		SOAK REQUIREMENTS STANDARD	
	TIME	CONDITIONS	TIME	CONDITIONS
3	168 Hours	≤30°C / 60% RH	192 Hours +5 / -0	30°C / 60% RH

 ©2022 Lumileds Holding B.V. All rights reserved.

Solder Pad Design

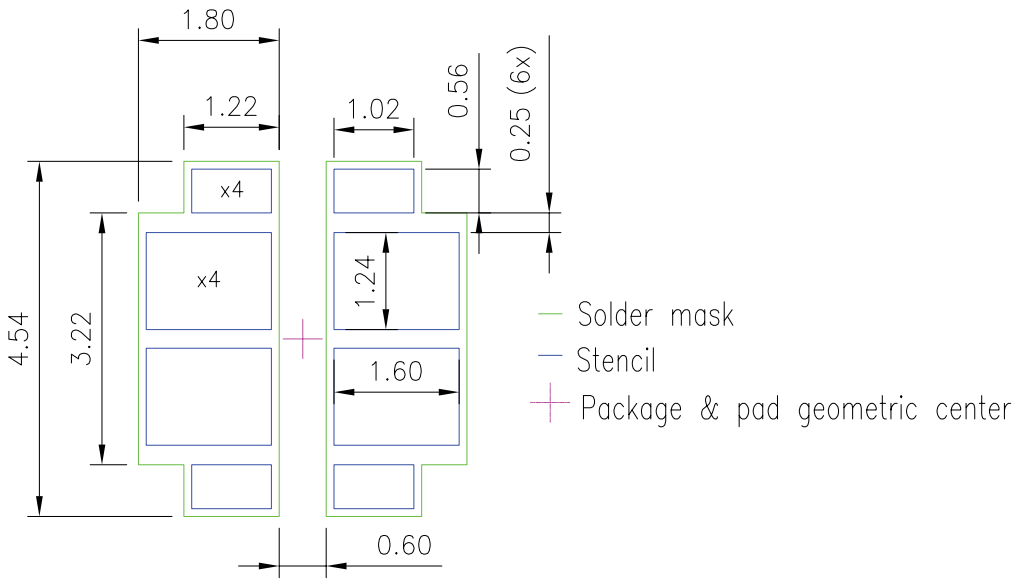

Figure 10. Recommended PCB solder pad layout for LUXEON 5050 Round LES, LUXEON 5050 Square LES and LUXEON 5050 HE.

Notes for Figure 10:
1. Drawings are not to scale.
2. All dimensions are in millimeters.
3. Refer to application brief AB174 for additional details regarding recommended PCB layout design.

Packaging Information

Pocket Tape Dimensions

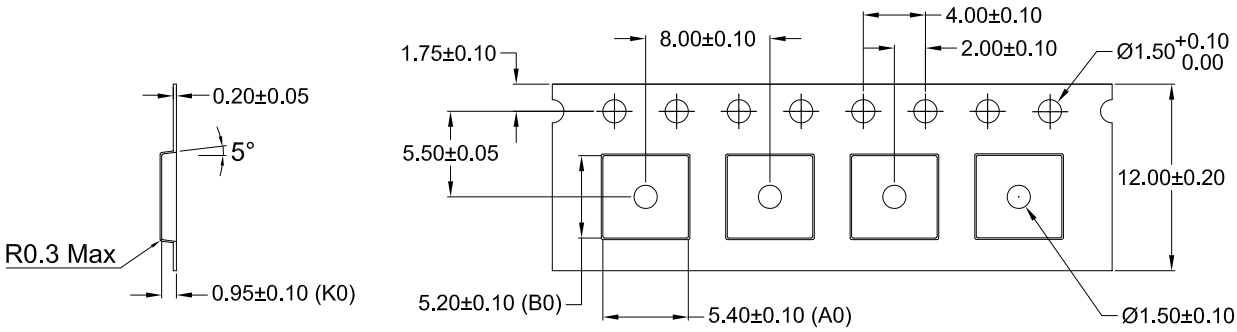

Figure 11. Pocket Tape dimensions for LUXEON 5050 Round LES, LUXEON 5050 Square LES and LUXEON 5050 HE.

Notes for Figure 11:
1. Drawings are not to scale.
2. All dimensions are in millimeters.

 ©2022 Lumileds Holding B.V. All rights reserved.

Reel Dimensions

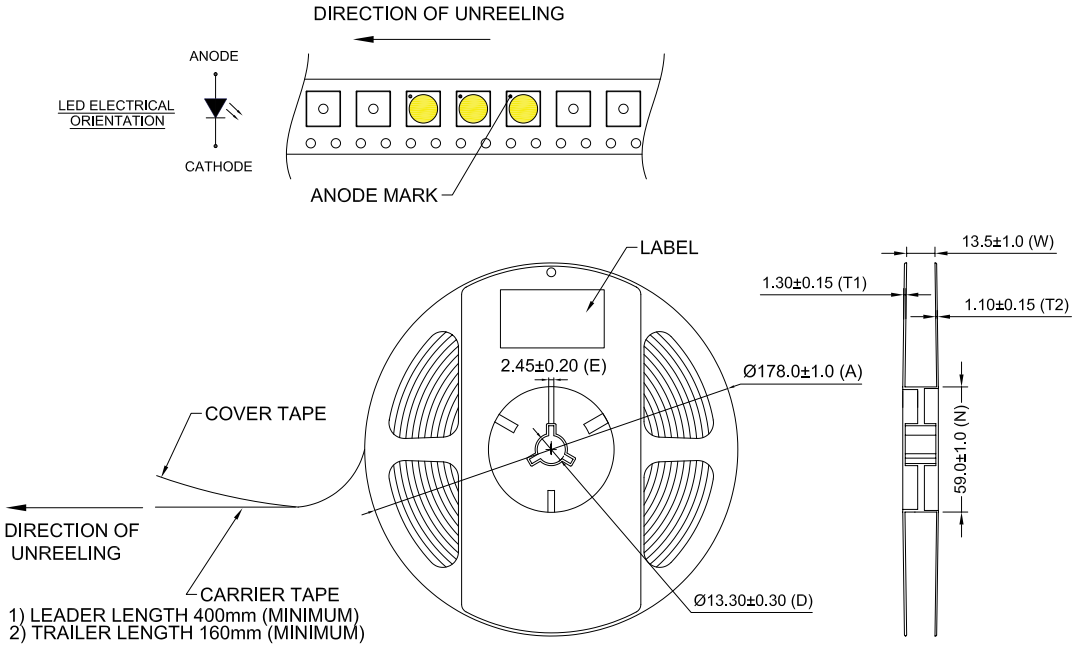

Figure 12a. Reel dimensions for LUXEON 5050 Round LES.

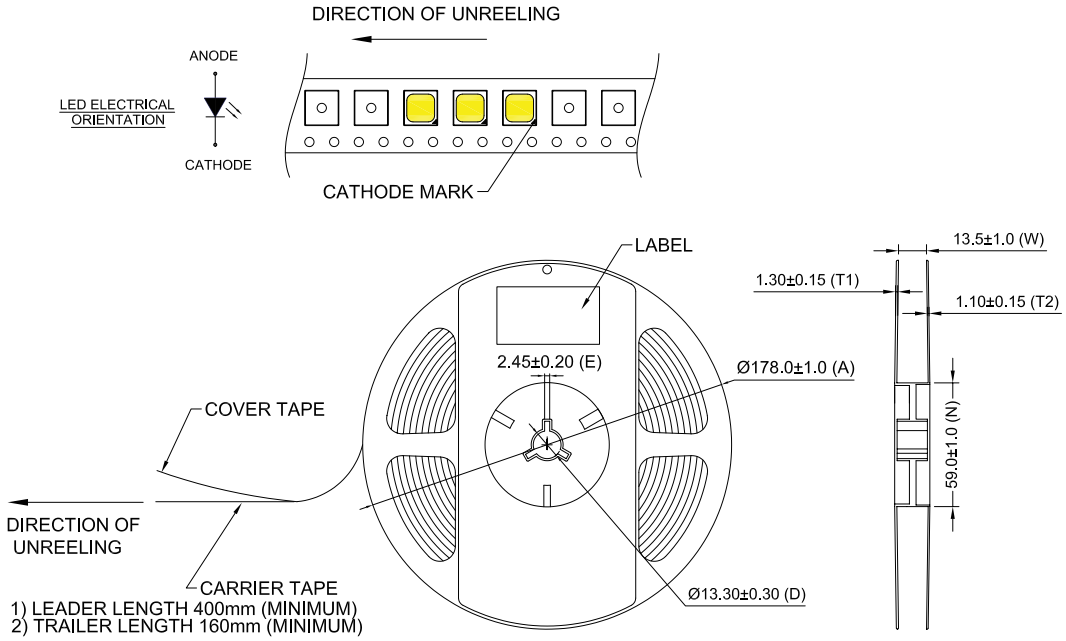

Figure 12b. Reel dimensions for LUXEON 5050 Square LES.

Notes for Figures 12a and 12b:
1. Drawings are not to scale.
2. All dimensions are in millimeters.

 ©2022 Lumileds Holding B.V. All rights reserved.

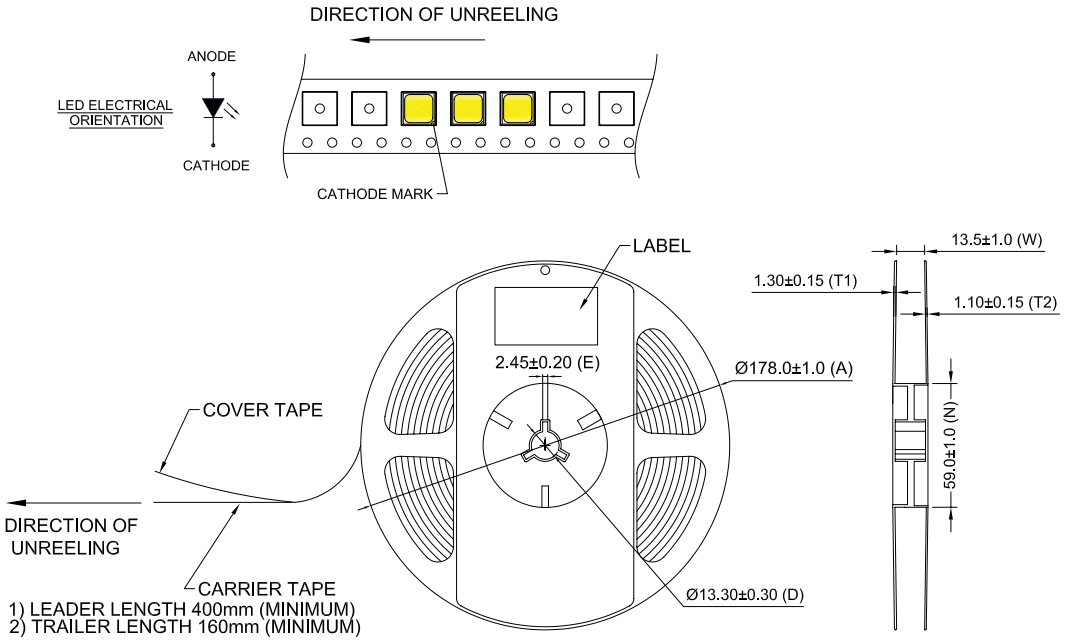

Figure 12c. Reel dimensions for LUXEON 5050 HE.

Notes for Figure 12c:
1. Drawings are not to scale.
2. All dimensions are in millimeters.

 ©2022 Lumileds Holding B.V. All rights reserved.

About Lumileds

Companies developing automotive, mobile, IoT and illumination lighting applications need a partner who can collaborate with them to push the boundaries of light. With over 100 years of inventions and industry firsts, Lumileds is a global lighting solutions company that helps customers around the world deliver differentiated solutions to gain and maintain a competitive edge. As the inventor of Xenon technology, a pioneer in halogen lighting and the leader in high performance LEDs, Lumileds builds innovation, quality and reliability into its technology, products and every customer engagement. Together with its customers, Lumileds is making the world better, safer, more beautiful—with light.

To learn more about our lighting solutions, visit lumileds.com.

LUMILEDS

©2022 Lumileds Holding B.V. All rights reserved.
LUXEON is a registered trademark of the Lumileds Holding B.V. in the United States and other countries.

lumileds.com

Neither Lumileds Holding B.V. nor its affiliates shall be liable for any kind of loss of data or any other damages, direct, indirect or consequential, resulting from the use of the provided information and data. Although Lumileds Holding B.V. and/or its affiliates have attempted to provide the most accurate information and data, the materials and services information and data are provided "as is," and neither Lumileds Holding B.V. nor its affiliates warrants or guarantees the contents and correctness of the provided information and data. Lumileds Holding B.V. and its affiliates reserve the right to make changes without notice. You as user agree to this disclaimer and user agreement with the download or use of the provided materials, information and data. A listing of Lumileds product/patent coverage may be accessed at lumileds.com/patents.

DS174 LUXEON 5050
Product Datasheet 20220104